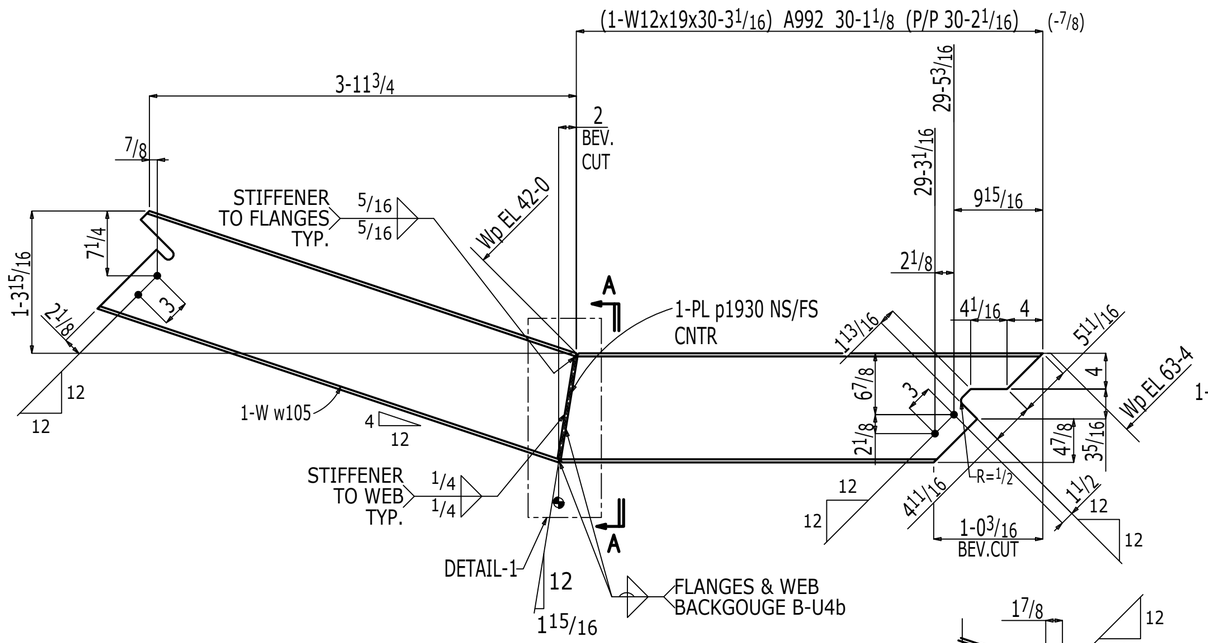

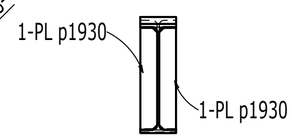

Section A-A
4077B1

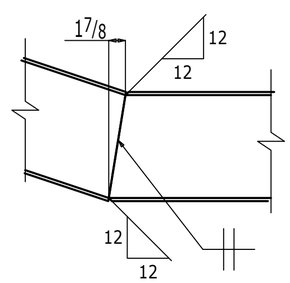

DETAIL-1

ONE BEAM 4077B1

W	12 3/16x1/4
F	4x3/8
K	7/8x5/8

BILL OF MATERIAL

SEQUENCE QTY	QTY	DESCRIPTION	LENGTH		MARK	GRADE	REMARKS	ADVANCE MILL #
1	ONE	BEAM			4077B1		NO PAINT	
	1	W12x19	30	3 1/16	4077B1	A992	B2E	
	1	W12x19	4	6 3/8	w105	A992		
	2	PL 3/8x1 7/8	0	11 1/2	p1930	A572-50		
		FIELD BOLTS						
	2	TC 3/4 Dia A325N	0	2			+2HD WASH	
	2	TC 3/4 Dia A325N	0	1 3/4			+1HD WASH	

ISSUE/REVISIONS			
REV	BY	DATE	DESCRIPTION

MATERIALS:	STRUCTURE:			
	LOCATION:			
	ARCHITECT:			
	ENGINEER:			
PAINT:	CUSTOMER:			
D.F.T.:	DRAFTER:	SHOP ORDER	SHEET NO.	REV
CLEANING:				
REF: / HOLES: 13/16"ø UNO	CHECKER:			

PLOT DATE & TIME
Aug 21 2019 16:52:38