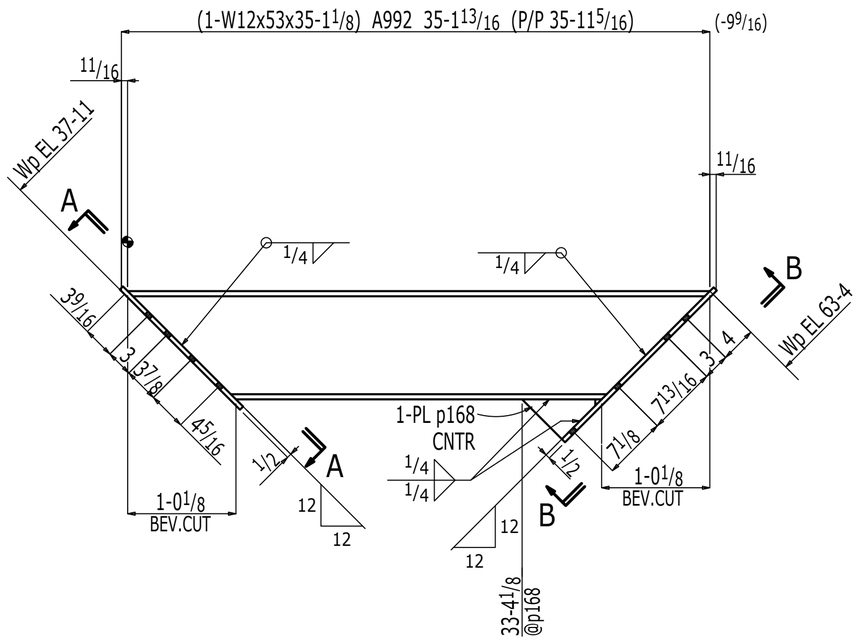

ONE BEAM 1164B1

W	12 1/8x3/8
F	10x9/16
K	1 3/8x1

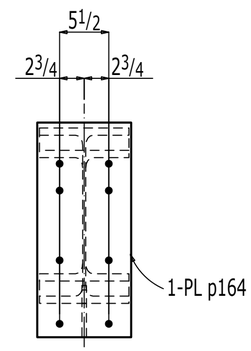

Section B-B
1164B1

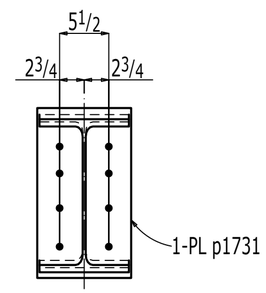

Section A-A
1164B1

BILL OF MATERIAL

SEQUENCE QTY	QTY	DESCRIPTION	LENGTH		MARK	GRADE	REMARKS	ADVANCE MILL #
1	ONE	BEAM			1164B1		NO PAINT	
	1	W12x53	35	1 1/8	1164B1	A992	B2E	
	1	PL 1/2x10 1/2	2	0	p164	A572-50		
	1	PL 1/2x10 1/2	1	7	p1731	A572-50		
	1	PL 1/2x5 13/16	0	6 5/16	p168	A572-50		
		FIELD BOLTS						
	8	3/4 Dia A325SC	0	2 3/4		F959	+1DTI,1HD WASH	
	8	3/4 Dia A325SC	0	2 1/4		F959	+1DTI,1HD WASH	

ISSUE/REVISIONS

REV	BY	DATE	DESCRIPTION

MATERIALS:	STRUCTURE:			
	LOCATION:			
	ARCHITECT:			
	ENGINEER:			
PAINT:	CUSTOMER:			
D.F.T.:	DRAFTER:	SHOP ORDER	SHEET NO.	REV
CLEANING:				
REF: HOLES: 13/16"ø UNO	CHECKER:			

PLOT DATE & TIME
Aug 21 2019 16:52:37